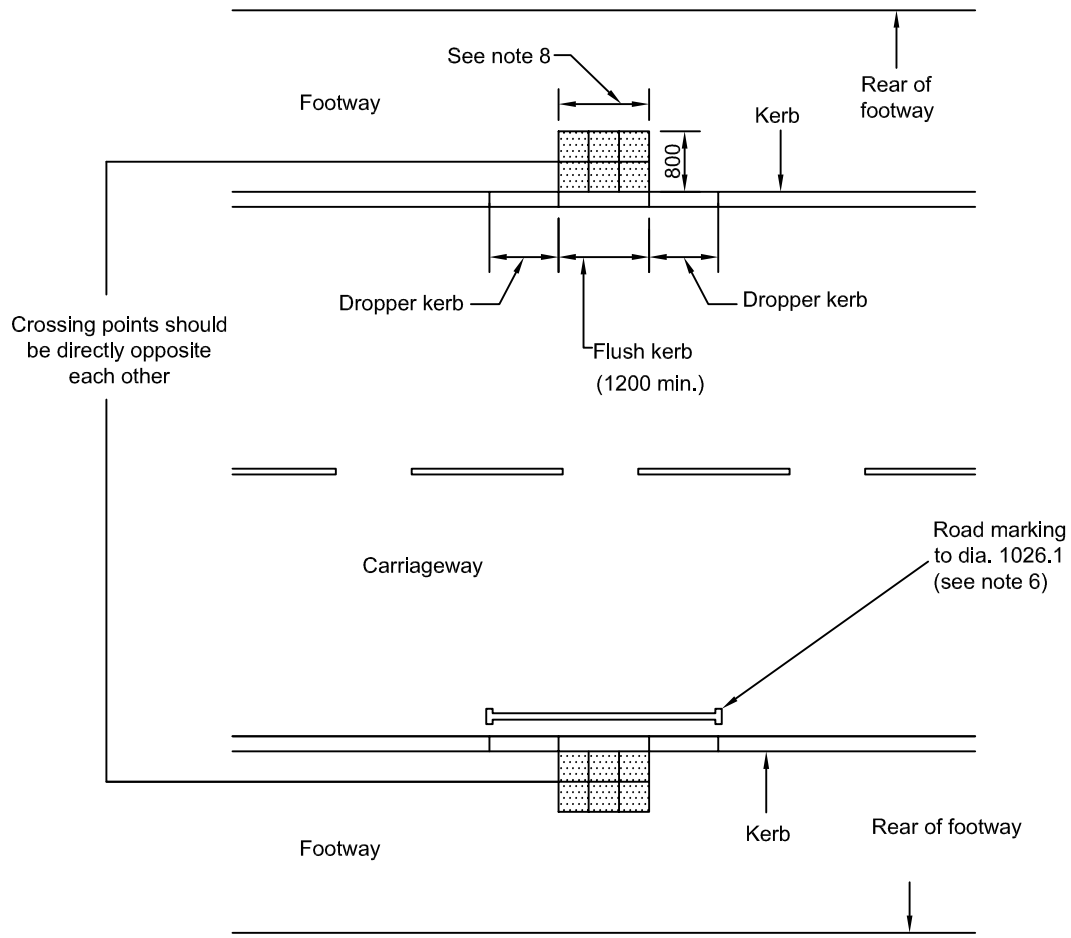

UNCONTROLLED CROSSING, AWAY FROM JUNCTIONS

NOTES

1. All dimensions are given in millimetres.

2. This drawing has been prepared from information given in the DETR document, Guidance on the use of Tactile Paving Surfaces.

3. Flags are to comply to B.S. 7997:2003.

4. Tactile flags used at uncontrolled crossings should be coloured buff or a contrasting Colour other than red.

5. Street furniture including, gullies, manhole covers and junction boxes should not be located in the vicinity of the cycle drop.

6. Road Markings to Diag.1026.1 TSGD should be applied at crossing points to prevent them being blocked by parked cars.

7. Tactile flags must not extend to the rear of the footway as this would indicate a controlled crossing.

8. Tactile flags shall extend over the full width of the flush kerbs.

Hounslow Highways
Delivering better streets

HOUNSLOW HIGHWAYS
STANDARD DETAILS

TITLE:
TACTILE SURFACES
AT UNCONTROLLED PEDESTRIAN CROSSING POINTS AWAY FROM JUNCTIONS

REV	DATE	BY	DESCRIPTION	CHK	APP
A	06/10/2014	AN	AMENDED COMMENTS FROM HOUNSLOW HIGHWAYS	TJM	SC

DRAWING STATUS: INFORMATION

SCALE @ A3:	CHECKED:	APPROVED:
NTS	GN	AA
CAD FILE: HH SD 1100 011.DWG	DESIGN-DRAWN: HS	DATE: Jan 15

DRAWING No: HH/SD/1100/011 REV: A

File name \\MIS.ESERVEMIS.CO.UK\DAVWWWROOT\CONTRACTS\HOUNSLOW\TP CHANGE AND CALL OFF SCHEMES\SSDG\SD APP B\CAD\SD AA 21.01.15\HH SD 1100 011.DWG, printed on 21 January 2015 16:27:05, by Albert Waldmeyer

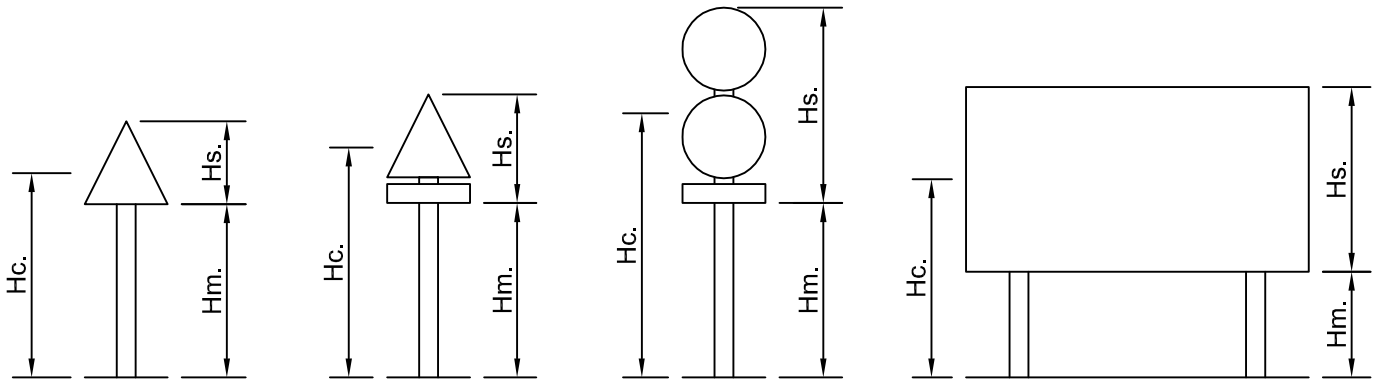

NOTE

1. The following notation have been adopted;

   Height of centroid = Hc.
   Height of Sign = Hs.
   Mounting Height = Hm.

2. Height to centroid = Mounting Height + $\frac{\text{Height of Sign(s)}}{2}$

WORKED EXAMPLE USING CHARTS ON DRAWING NO HH/SD/1200/001/D-G

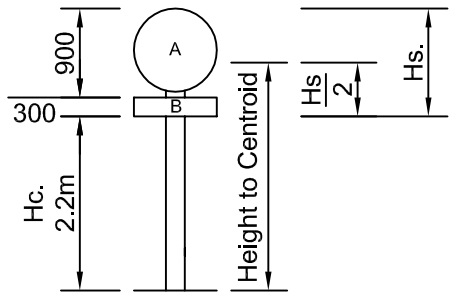

Area A = 0.64
Area B = 0.27
TOTAL = 0.91m²

DESIGN THE SIGNS REQUIRED IN THE ASSEMBLY

CALCULATE THE HEIGHT OF ALL THE SIGNS ON THE POST

Hs = Height of Sign A (900) + Height of Sign B (300) Including the gap between the signs
Hs = 1200mm or 1.2m

(If there is just one sign on the post, Hs = height of the one sign)

DETERMINE THE HEIGHT TO THE CENTROID

Height to Centroid = Mounting Height + Hs/2

Hc = 2200 + 1200/2
Hc = 2800 or 2.8m

Using the Chart on Drawing No. HH/SD/1200/001/E and the appropriate row and column, determine post size alternatives.

From the Chart you have a choice of:-
One x 114mm diameter post or
Two x 76mm diameter posts

OR

If it is an illuminated sign one 89mm large base post.

Determine foundation size using charts on HH/SD/1200/001/C and HH/SD/1200/001/E

NOTES

1. All dimensions are given in millimetres unless stated otherwise.

2. This chart is suitable for determining post and foundation type in all areas maximum design wind pressure 1.3kPa, safety factor against overturning is 1.23 to BS EN 12899-1:2007 and DMRB volume 2 section 2 part 1 BD 94/07. Maximum allowable ground pressure 85 kPa.

3. This drawing should be read in conjunction with HH/SD/1200/001/B.

4. On multi-post assembles where horizontal spacing between individual foundations is impractical the foundation widths shall be combined to a single width see HH/SD/1200/001/C

5. Signs must be designed according to the Traffic Signs Manual and the Traffic Signs Regulations and General Directions.

6. Charts are provided for determining post sizes and foundation types on drawing no. HH/SD/1200/001/D-G. They are suitable for rural areas but should not be used for signs in very exposed areas. In these locations calculations from first principles or suitable design software should be used.

7. For signs having an Area/Height greater than the limits provided on the Charts, first principles or appropriate sign design software to BS EN 12899-1 should be used.

8. The charts assume the foundations will be in a soft clay, clay loam, poorly compacted sand, clays containing a large amount of silt and vegetable matter and made-up ground where Ground Factor G is 230kN/m² and soil impact factor Ksi is 0.5

9. The charts assume that the post centres are equally spaced on sign assembles with 2 or more posts.

10. On signs requiring illumination in accordance with 'The Traffic Signs Regulations and General Directions 2002', large base posts are required as per drawing no. HH/SD/1200/001/B

11. Non-illuminated signs requiring 2 or more posts should be erected in socketed foundations as per drawing no.HH/SD/1200/001/B

12. For signs on 2 or more posts where it is impractical to use individual post foundations then a continuous foundation should be used as per drawing no. HH/SD/1200/001/C

Hounslow Highways
Delivering better streets

HOUNSLOW HIGHWAYS
STANDARD DETAILS

TITLE:
POST FOUNDATION DETAILS
TRAFFIC SIGN NOTES

REV	DATE	BY	DESCRIPTION	CHK	APP

DRAWING STATUS: INFORMATION

SCALE @ A3:	CHECKED:	APPROVED:
N.T.S	TJM	SC
CAD FILE: HH SD 1200 001 A-G.DWG	DESIGN-DRAWN: AN	DATE: 16/10/14
DRAWING No: HH/SD/1200/001/A		REV:

File name \\MIS.ESERVEMIS.CO.UK\DAV\WWWROOT\CONTRACTS\HOUNSLOW\TP CHANGE AND CALL OFF SCHEMES\SSDG\SD APP B\CAD\SD AA 21.01.15\HH SD 1200 001 A-G.DWG, printed on 21 January 2015 16:28:06, by Albert Waldmeyer

Foundation Type	A	B	C	D	E	F	G	H	I
Length (L)	450	700	800	1000	900	1300	1200	1800	1800
Width (W)	450	500	500	500	500	500	600	600	600
Depth (D)	600	600	700	800	900	900	1000	1000	1200

All dimensions are minimum requirement, thus length of foundation can be increased to suit more than one posts arrangements.

NOTES

1. All dimensions are given in millimetres unless stated otherwise.

2. This chart is suitable for determining post and foundation type in all areas maximum design wind pressure 1.3kPa, safety factor against overturning is 1.23 to BS EN 12899-1:2007 and DMRB volume 2 section 2 part 1 BD 94/07. Maximum allowable ground pressure 85 kPa.

3. This drawing should be read in conjunction with HH/SD/1200/001/D-G.

4. On multi-post assembles where horizontal spacing between individual foundations is impractical the foundation widths shall be combined to a single width see HH/SD/1200/001/C.

5. For signs beyond the range of this chart post sizes and foundations shall be designed from first principles or appropriate sign design software.

6. Concrete shall be grade ST3

LARGE BASE SIGNAL OR ILLUMINATED SIGNS

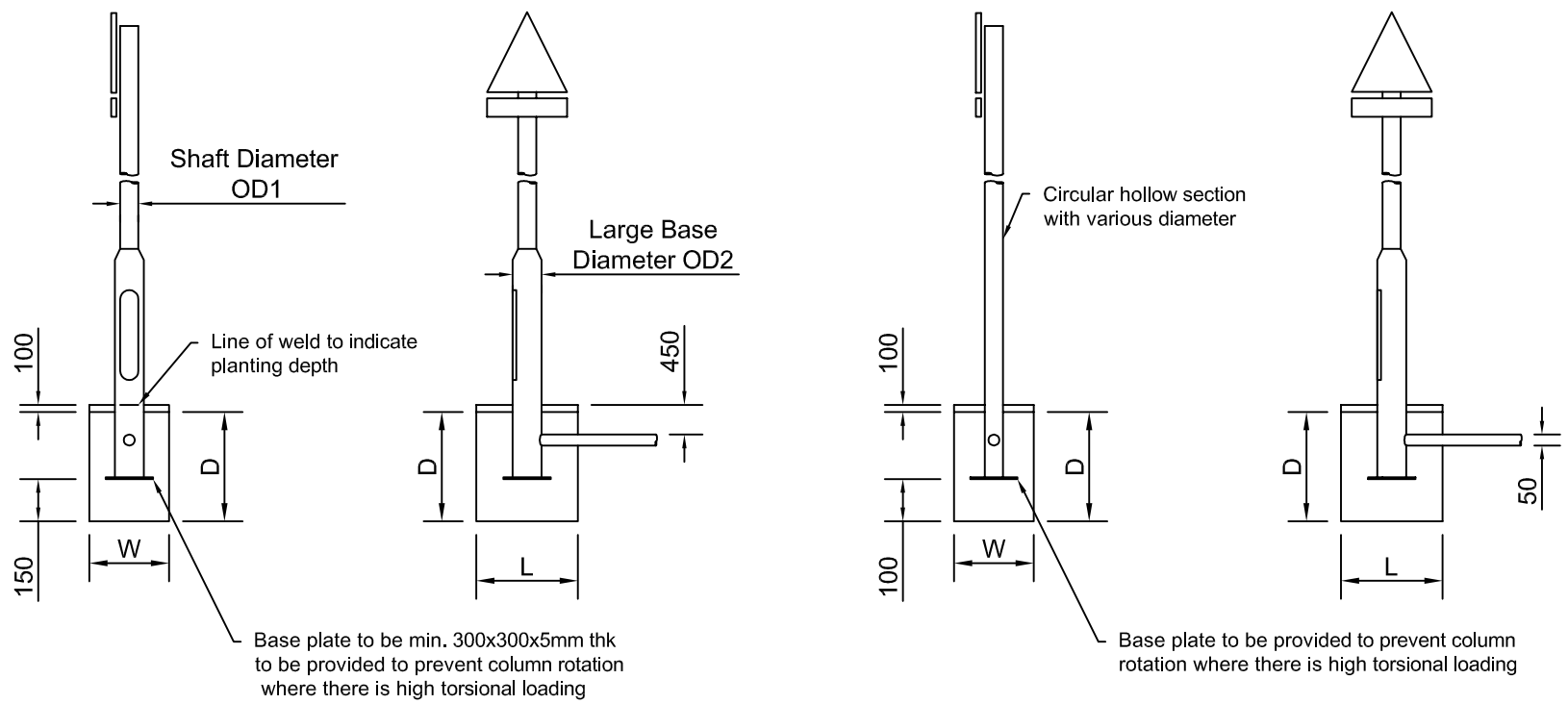

OD1	OD2	WIDTH (W)	DEPTH (D)	LENGTH (L)	CABLE SLOT
76	140	SEE CHART HH/SD/1200/001/D-G or use software to BS EN 12899-1			150x75
89	140				150x75
114	140				150x75
114	168				150x75

SOCKETED POST

Post sockets are to be 25mm to 70mm greater diameter than the proposed post and void filled with 3mm grit or kiln dried sharp sand upto 100mm of the top of the socket. The top 100mm of the void to be filled with rapid set cement mortar. Sockets may be fabricated from PVC, MDPE, Concrete or Earthenware Pipes. Sockets are not to be used on single post sign assembles

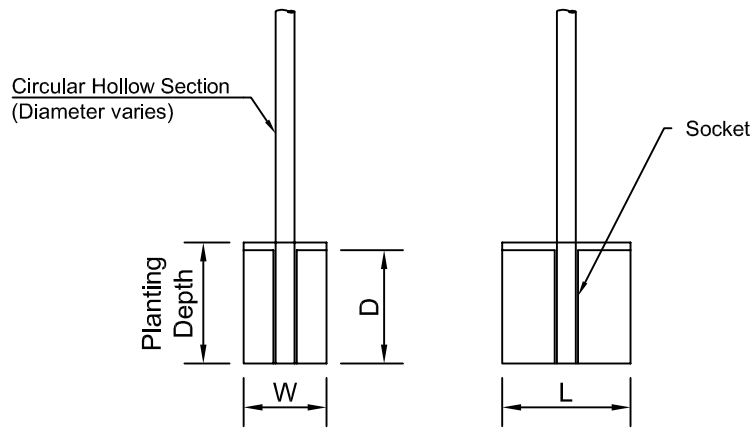

BASEPLATE SIZE	
Post Size	Baseplate Size
76mm dia.	150x150x5mm THK
89mm dia.	150x150x5mm THK
114mm dia.	200x200x5mm THK
100x50mm	150x100x5mm THK
120x80mm	200x150x5mm THK

Hounslow Highways
Delivering better streets

HOUNSLOW HIGHWAYS
STANDARD DETAILS

TITLE:
POST FOUNDATION DETAILS
CONCRETE FOUNDATIONS FOR STRAIGHT
AND LARGE BASE TRAFFIC SIGN POSTS

REV	DATE	BY	DESCRIPTION	CHK	APP

DRAWING STATUS: INFORMATION

SCALE @ A3:	CHECKED:	APPROVED:
N.T.S	TJM	SC
CAD FILE: HH SD 1200 001 A-G.DWG	DESIGN-DRAWN: AN	DATE: 16/10/14
DRAWING No: HH/SD/1200/001/B		REV:

File name \\MIS.ESERVEMIS.CO.UK\DAVWWWROOT\CONTRACTS\HOUNSLOW\TP CHANGE AND CALL OFF SCHEMES\SSD\SD APP B\CAD\SD AA 21.01.15\HH SD 1200 001 A-G.DWG, printed on 21 January 2015 16:28:41, by Albert Waldmeyer

Sign Board Width = Hm. Metres	Minimum Base Width = W.m Metres
2.00 - 2.50	0.80
2.60 - 2.80	1.00
2.90 - 3.20	1.20
3.30 - 3.50	1.30

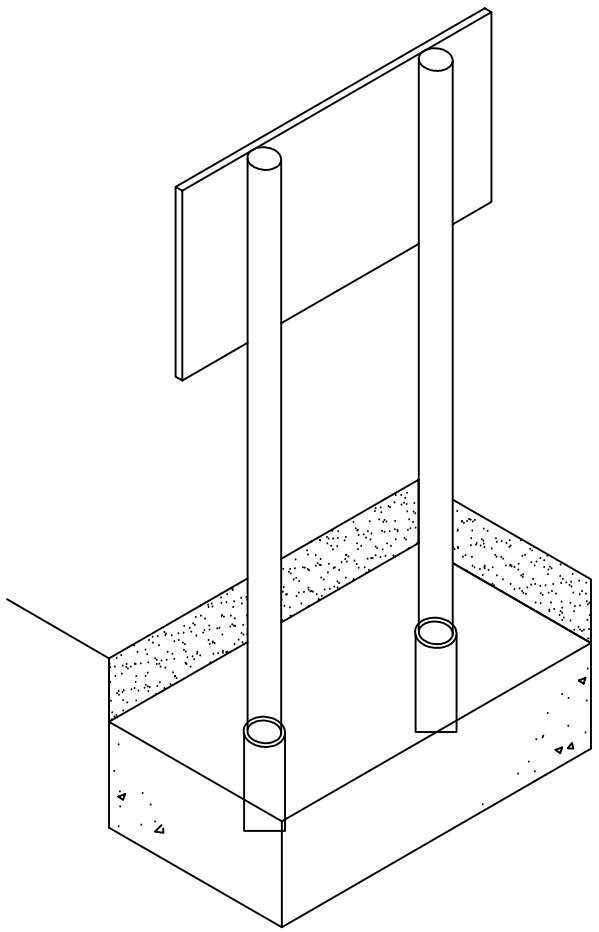

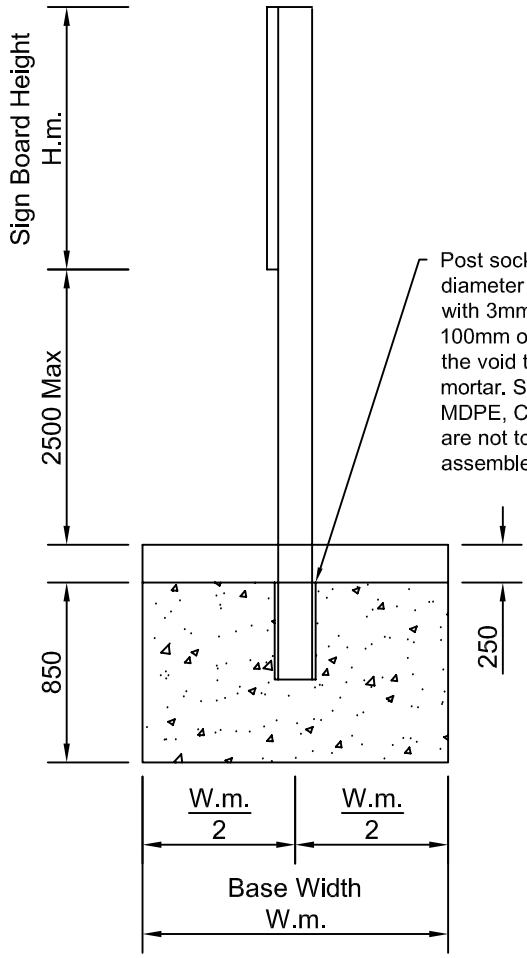

Post sockets are to be 25mm to 70mm greater diameter than the proposed post and void filled with 3mm grit or kiln dried sharp sand up to 100mm of the top socket. The top 100mm of the void to be filled with rapid set cement mortar. Sockets may be fabricated from PVC, MDPE, Concrete or Earthware pipes. Sockets are not to be used on single post sign assembles.

SIDE ELEVATION

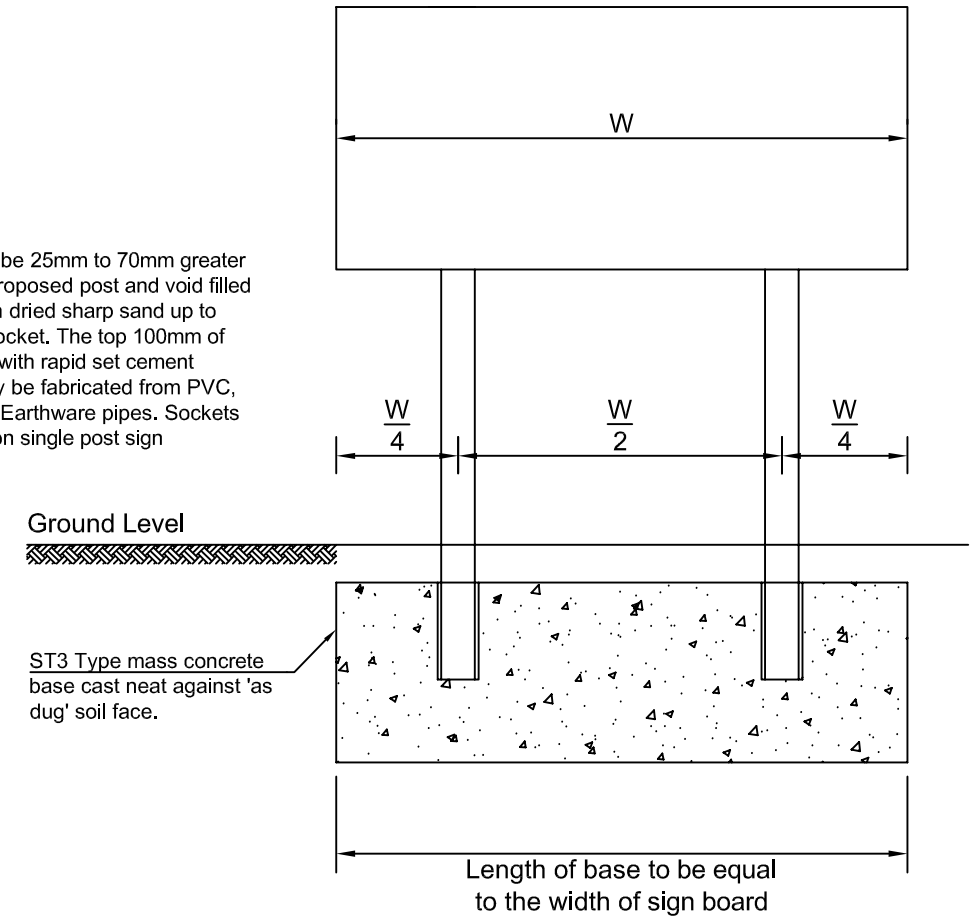

FRONT ELEVATION

DESIGN ASSUMPTIONS

Wind Pressure = 1.3kPa
Factor of Safety Against Overturning = 1.25
Max Bearing Pressure - 85 kN/m²
Sign is mounted at maximum of 2.50m above ground level

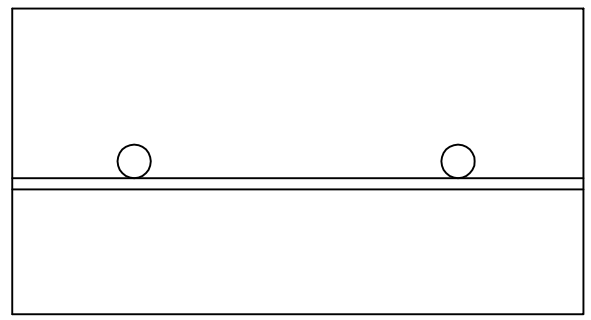

PLAN ELEVATION

NOTES

1. All dimensions are given in millimetres unless stated otherwise.

2. This chart is suitable for determining post and foundation type in all areas maximum design wind pressure 1.3kPa, safety factor against overturning is 1.23 to BS EN 12899-1:2007 and DMRB volume 2 section 2 part 1 BD 94/07. Maximum allowable ground pressure 85 kPa.

3. This drawing should be read in conjunction with HH/SD/1200/001/D-G.

4. On multi-post assembles where horizontal spacing between individual foundations is impractical the foundation widths shall be combined to a single width.

5. For signs beyond the range of this chart post sizes and foundations shall be designed from first principles or appropriate sign design software.

6. Concrete shall be grade ST3

Hounslow Highways
Delivering better streets

HOUNSLOW HIGHWAYS
STANDARD DETAILS

TITLE:
POST FOUNDATION DETAILS
CONCRETE BASE FOR LARGE DIRECTION SIGNS

REV	DATE	BY	DESCRIPTION	CHK	APP

DRAWING STATUS: INFORMATION

SCALE @ A3:	CHECKED:	APPROVED:
N.T.S	TJM	SC
CAD FILE: HH SD 1200 001 A-G.DWG	DESIGN-DRAWN: AN	DATE: 16/10/2014
DRAWING No: HH/SD/1200/001/C		REV:

File name \\MIS.ESERVEMIS.CO.UK\DAVWWWROOT\CONTRACTS\HOUNSLOW\TP CHANGE AND CALL OFF SCHEMES\SSDG\SD APP B\CAD\SD AA 21.01.15\HH SD 1200 001 A-G.DWG, printed on 21 January 2015 16:30:18, by Albert Waldmeyer

Area of Sign (s) m²

Hc. (m)	Up to 0.25				0.26 - 0.50				0.51 - 0.75				0.76 - 1.00				1.01 - 1.25				1.26 - 1.50				1.51 - 1.75				1.76 - 2.00				2.01 - 2.25				2.26 - 2.50				2.51 - 2.75				2.76 - 3.00				Hc. (m)
2.51 - 2.75	1	2	3	LB	1	2	3	LB	1	2	3	LB	1	2	3	LB	1	2	3	LB	1	2	3	LB	1	2	3	LB	1	2	3	LB	1	2	3	LB	1	2	3	LB	1	2	3	LB	1	2	3	LB	2.51 - 2.75
	60	-	-	76	76	60	-	76	89	76	-	76	114	76	-	89	114	89	-	89	114	89	-	114	114	114	-	114	140	114	-	114	140	114	89	114	140	114	89	114	140	114	114	140	140	114	114	140	
	A	-	-	A	B	A	-	B	C	B	-	C	C	B	-	C	C	B	-	C	D	C	-	D	D	C	-	D	D	C	-	D	E	C	C	E	E	C	C	E	E	C	C	E	F	D	C	D	
2.26 - 2.50	1	2	3	LB	1	2	3	LB	1	2	3	LB	1	2	3	LB	1	2	3	LB	1	2	3	LB	1	2	3	LB	1	2	3	LB	1	2	3	LB	1	2	3	LB	1	2	3	LB	1	2	3	LB	2.26 - 2.50
	60	-	-	76	76	60	-	76	89	60	-	76	114	76	-	76	114	76	-	89	114	89	-	89	114	89	-	114	140	114	-	114	140	114	89	114	140	114	89	114	140	114	89	114	140	114	114	140	
	A	-	-	A	A	A	-	A	C	A	-	C	C	B	-	C	C	B	-	C	D	C	-	D	D	C	-	D	D	C	-	D	D	C	C	D	E	C	C	E	E	C	C	E	E	D	C	C	
2.01 - 2.25	1	2	3	LB	1	2	3	LB	1	2	3	LB	1	2	3	LB	1	2	3	LB	1	2	3	LB	1	2	3	LB	1	2	3	LB	1	2	3	LB	1	2	3	LB	1	2	3	LB	1	2	3	LB	2.01 - 2.25
	60	-	-	76	76	60	-	76	89	60	-	76	89	76	-	76	114	76	-	76	114	89	-	89	114	89	-	89	140	89	-	114	140	114	89	114	140	114	89	114	140	114	89	114	140	114	89	114	
	A	-	-	A	A	A	-	A	B	A	-	B	C	B	-	C	C	B	-	C	C	B	-	C	D	C	-	D	D	C	-	D	D	C	B	D	D	C	C	D	E	C	C	E	E	C	C	C	
1.76 - 2.00	1	2	3	LB	1	2	3	LB	1	2	3	LB	1	2	3	LB	1	2	3	LB	1	2	3	LB	1	2	3	LB	1	2	3	LB	1	2	3	LB	1	2	3	LB	1	2	3	LB	1	2	3	LB	1.76 - 2.00
	60	-	-	76	76	60	-	76	76	60	-	76	89	76	-	76	114	76	-	76	114	76	-	76	114	89	-	89	114	89	-	89	140	89	76	89	140	114	76	114	140	114	89	114	140	114	89	114	
	A	-	-	A	A	A	-	A	B	A	-	B	C	A	-	C	C	B	-	C	C	B	-	C	C	B	-	C	D	C	-	D	D	C	B	D	D	C	B	D	D	C	B	D	E	C	C	B	
1.51 - 1.75	1	2	3	LB	1	2	3	LB	1	2	3	LB	1	2	3	LB	1	2	3	LB	1	2	3	LB	1	2	3	LB	1	2	3	LB	1	2	3	LB	1	2	3	LB	1	2	3	LB	1	2	3	LB	1.51 - 1.75
	60	-	-	76	60	-	-	76	76	60	-	76	89	60	-	76	89	76	-	76	114	76	-	76	114	76	-	76	114	89	-	76	114	89	76	89	114	89	76	89	140	114	76	89	140	114	89	89	
	A	-	-	A	A	-	-	A	B	A	-	B	B	A	-	B	C	A	-	C	C	B	-	C	C	B	-	C	C	B	-	C	D	C	A	C	D	C	B	D	D	C	B	D	D	C	B	A	
1.26 - 1.50	1	2	3	LB	1	2	3	LB	1	2	3	LB	1	2	3	LB	1	2	3	LB	1	2	3	LB	1	2	3	LB	1	2	3	LB	1	2	3	LB	1	2	3	LB	1	2	3	LB	1	2	3	LB	1.26 - 1.50
	60	-	-	76	60	-	-	76	76	60	-	76	76	60	-	76	89	60	-	76	89	76	-	76	114	76	-	76	114	76	-	76	114	89	76	76	114	89	76	76	114	89	76	76	140	89	76	76	
	A	-	-	A	A	-	-	A	A	A	-	A	B	A	-	B	B	A	-	B	C	A	-	C	C	B	-	C	C	B	-	C	C	B	A	C	D	B	B	C	D	C	B	D	D	C	B	A	
1.01 - 1.25	1	2	3	LB	1	2	3	LB	1	2	3	LB	1	2	3	LB	1	2	3	LB	1	2	3	LB	1	2	3	LB	1	2	3	LB	1	2	3	LB	1	2	3	LB	1	2	3	LB	1	2	3	LB	1.01 - 1.25
	60	-	-	76	60	-	-	76	60	-	-	76	76	60	-	76	76	60	-	76	89	60	-	76	89	76	-	76	114	76	-	76	114	76	60	76	114	76	76	76	114	89	60	76	114	89	76	76	
	A	-	-	A	A	-	-	A	A	-	-	A	B	A	-	B	B	A	-	A	B	A	-	A	C	A	-	C	C	B	-	C	C	B	A	C	C	B	A	C	D	B	A	C	D	B	B	A	
	Up to 0.25				0.26 - 0.50				0.51 - 0.75				0.76 - 1.00				1.01 - 1.25				1.26 - 1.50				1.51 - 1.75				1.76 - 2.00				2.01 - 2.25				2.26 - 2.50				2.51 - 2.75				2.76 - 3.00				

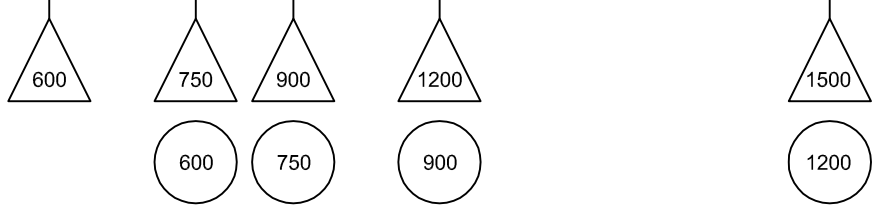

Height to Centroid(Hc) = Mounting Height(Hm) + $\frac{\text{Height of Sign(s) (Hs)}}{2}$

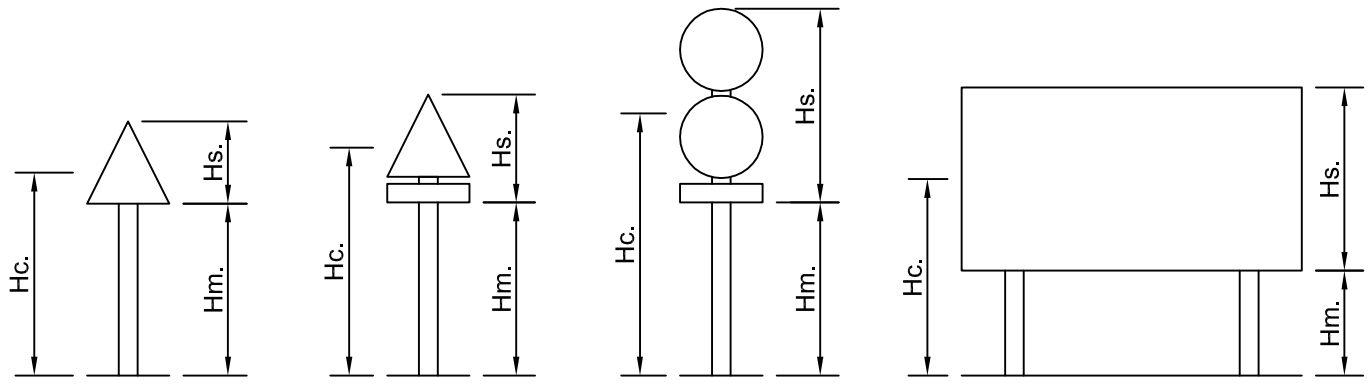

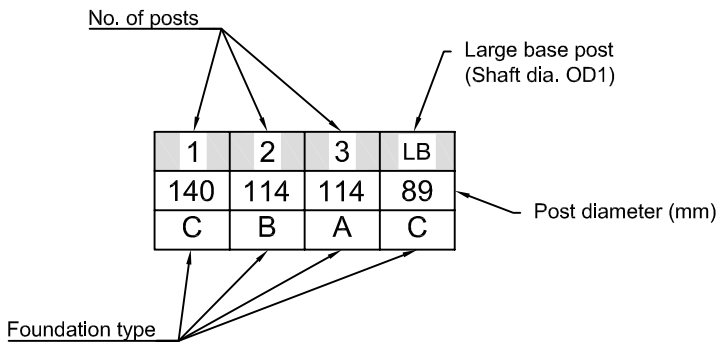

NOTES

1. All dimensions are given in millimetres unless stated otherwise.

2. This chart is suitable for determining post and foundation type in all areas maximum design wind pressure 1.3kPa, safety factor against overturning is 1.23 to BS EN 12899-1:2007 and DMRB volume 2 section 2 part 1 BD 94/07.

3. Maximum allowable ground pressure 85 kPa.

4. This drawing should be read in conjunction with HH/SD/1200/001/B.

5. On multi-post assembles where horizontal spacing between individual foundations is impractical the foundation widths shall be combined to a single width see HH/SD/1200/001/C.

6. For signs beyond the range of this chart post sizes and foundations shall be designed from first principles or appropriate sign design software.

Hounslow Highways
Delivering better streets

HOUNSLOW HIGHWAYS
STANDARD DETAILS

TITLE:
POST FOUNDATION DETAILS
DESIGN TABLE (1 OF 2) OF POST DETAILS AND
FOUNDATION SIZES FOR SIGNS UP TO 3sq.m AREA

REV	DATE	BY	DESCRIPTION	CHK	APP

DRAWING STATUS: INFORMATION

SCALE @ A3:	CHECKED:	APPROVED:
N.T.S	TJM	SC
CAD FILE: HH SD 1200 001 A-G.DWG	DESIGN-DRAWN: AN	DATE: 16/10/14
DRAWING No: HH/SD/1200/001/D		REV:

File name \\MIS.ESERVEMIS.CO.UK\DAVWWWROOT\CONTRACTS\HOUNSLOW\TP CHANGE AND CALL OFF SCHEMES\SSD\SD APP B\CAD\SD AA 21.01.15\HH SD 1200 001 A-G.DWG, printed on 21 January 2015 16:30:51, by Albert Waldmeyer

Area of Sign (s) m²

Hc. (m)	Up to 0.25				0.26 - 0.50				0.51 - 0.75				0.76 - 1.00				1.01 - 1.25				1.26 - 1.50				1.51 - 1.75				1.76 - 2.00				2.01 - 2.25				2.26 - 2.50				2.51 - 2.75				2.76 - 3.00				Hc. (m)
	1	2	3	LB	1	2	3	LB	1	2	3	LB	1	2	3	LB	1	2	3	LB	1	2	3	LB	1	2	3	LB	1	2	3	LB	1	2	3	LB	1	2	3	LB	1	2	3	LB	1	2	3	LB	
4.26 - 4.50	114	-	-	76	114	76	-	89	114	89	-	114	140	114	-	114	140	114	-	114	140	114	-	140	140	114	-	140	140	140	114	140	168	140	114	140	168	140	114	140	168	140	114	-	194	140	140	-	4.26 - 4.50
	C	-	-	C	C	C	-	C	C	C	-	C	D	C	-	D	E	D	-	E	E	D	-	E	F	D	-	F	F	D	D	F	F	D	D	F	F	E	D	F	G	E	D	-	G	E	D	-	
	1	2	3	LB	1	2	3	LB	1	2	3	LB	1	2	3	LB	1	2	3	LB	1	2	3	LB	1	2	3	LB	1	2	3	LB	1	2	3	LB	1	2	3	LB	1	2	3	LB	1	2	3	LB	
4.01 - 4.25	76	-	-	76	114	76	-	76	114	89	-	114	114	89	-	114	140	114	-	114	140	114	-	140	140	114	-	140	140	114	114	140	168	140	114	140	168	140	114	140	168	140	114	140	168	140	140	-	4.01 - 4.25
	C	-	-	C	C	C	-	C	C	C	-	C	D	C	-	D	D	C	-	D	E	D	-	E	E	D	-	E	F	D	C	F	F	D	D	F	F	D	D	F	G	E	D	G	G	E	D	-	
	1	2	3	LB	1	2	3	LB	1	2	3	LB	1	2	3	LB	1	2	3	LB	1	2	3	LB	1	2	3	LB	1	2	3	LB	1	2	3	LB	1	2	3	LB	1	2	3	LB	1	2	3	LB	
3.76 - 4.00	76	-	-	76	89	76	-	76	114	89	-	89	114	89	-	114	140	114	-	114	140	114	-	140	140	114	-	140	140	114	114	140	140	140	114	140	168	140	114	140	168	140	114	140	168	140	114	140	3.76 - 4.00
	B	-	-	B	C	B	-	C	C	C	-	C	D	C	-	D	D	C	-	D	E	C	-	E	E	D	-	E	F	D	C	F	F	D	C	F	F	D	D	F	F	D	D	F	G	E	D	F	
	1	2	3	LB	1	2	3	LB	1	2	3	LB	1	2	3	LB	1	2	3	LB	1	2	3	LB	1	2	3	LB	1	2	3	LB	1	2	3	LB	1	2	3	LB	1	2	3	LB	1	2	3	LB	
3.51 - 3.75	76	-	-	76	89	76	-	76	114	76	-	89	114	89	-	114	140	89	-	114	140	114	-	114	140	114	-	114	140	114	114	140	140	114	114	140	168	140	114	140	168	140	114	140	168	140	114	140	3.51 - 3.75
	B	-	-	B	C	B	-	C	C	C	-	C	D	C	-	C	D	C	-	D	D	C	-	D	E	D	-	E	E	D	C	E	F	D	C	F	F	D	C	F	F	D	D	F	F	D	D	E	
	1	2	3	LB	1	2	3	LB	1	2	3	LB	1	2	3	LB	1	2	3	LB	1	2	3	LB	1	2	3	LB	1	2	3	LB	1	2	3	LB	1	2	3	LB	1	2	3	LB	1	2	3	LB	
3.26 - 3.50	76	-	-	76	89	76	-	76	114	76	-	89	114	89	-	114	114	89	-	114	140	114	-	114	140	114	-	114	140	114	89	140	140	114	114	140	140	114	114	140	168	140	114	140	168	140	114	140	3.26 - 3.50
	A	-	-	A	C	B	-	C	C	B	-	C	D	C	-	C	D	C	-	D	D	C	-	D	E	C	-	E	E	D	C	E	F	D	C	F	F	D	C	F	F	D	C	F	F	D	D	E	
	1	2	3	LB	1	2	3	LB	1	2	3	LB	1	2	3	LB	1	2	3	LB	1	2	3	LB	1	2	3	LB	1	2	3	LB	1	2	3	LB	1	2	3	LB	1	2	3	LB	1	2	3	LB	
3.01 - 3.25	76	-	-	76	76	76	-	76	114	76	-	76	114	76	-	89	114	89	-	114	140	114	-	114	140	114	-	114	140	114	89	140	140	114	114	140	140	114	114	140	140	140	114	140	168	140	114	140	3.01 - 3.25
	A	-	-	A	C	B	-	C	C	B	-	C	C	C	-	C	D	C	-	D	D	C	-	D	D	C	-	D	E	C	C	E	E	D	C	E	F	D	C	F	F	D	C	F	F	D	C	E	
	1	2	3	LB	1	2	3	LB	1	2	3	LB	1	2	3	LB	1	2	3	LB	1	2	3	LB	1	2	3	LB	1	2	3	LB	1	2	3	LB	1	2	3	LB	1	2	3	LB	1	2	3	LB	
2.76 - 3.00	76	-	-	76	76	76	-	76	114	76	-	76	114	76	-	89	114	89	-	114	140	89	-	114	140	114	-	114	140	114	89	114	140	114	89	140	140	114	114	140	140	114	114	140	140	140	114	140	2.76 - 3.00
	A	-	-	A	B	A	-	B	C	B	-	C	C	B	-	C	D	C	-	D	D	C	-	D	D	C	-	D	D	C	C	D	E	C	C	E	E	D	C	E	F	D	C	F	F	D	C	D	
	Up to 0.25				0.26 - 0.50				0.51 - 0.75				0.76 - 1.00				1.01 - 1.25				1.26 - 1.50				1.51 - 1.75				1.76 - 2.00				2.01 - 2.25				2.26 - 2.50				2.51 - 2.75				2.76 - 3.00				

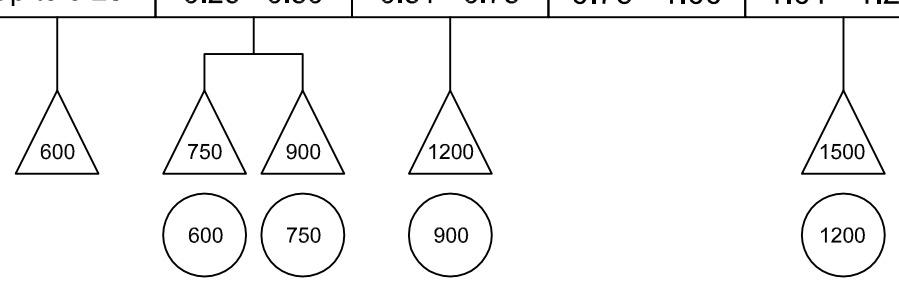

Height to Centroid(Hc) = Mounting Height(Hm) + $\frac{\text{Height of Sign(s) (Hs)}}{2}$

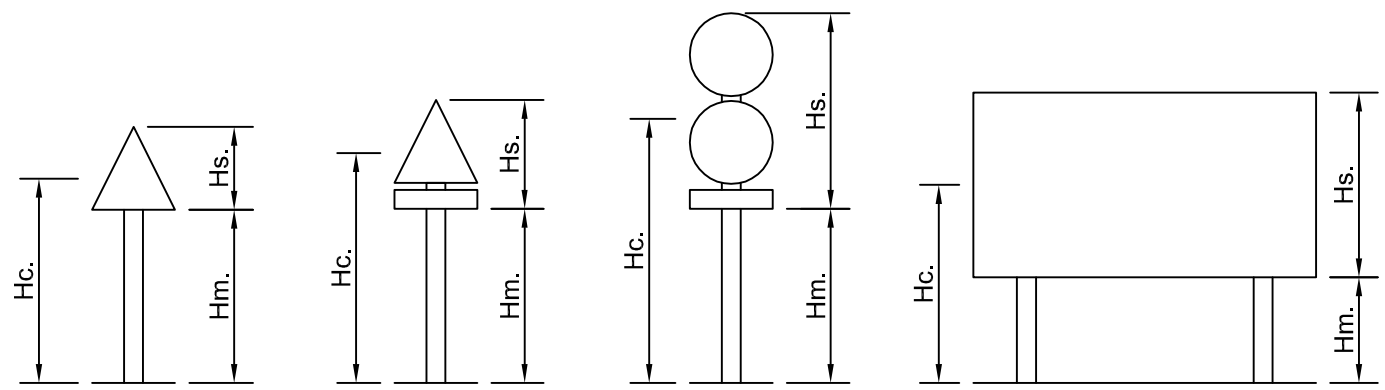

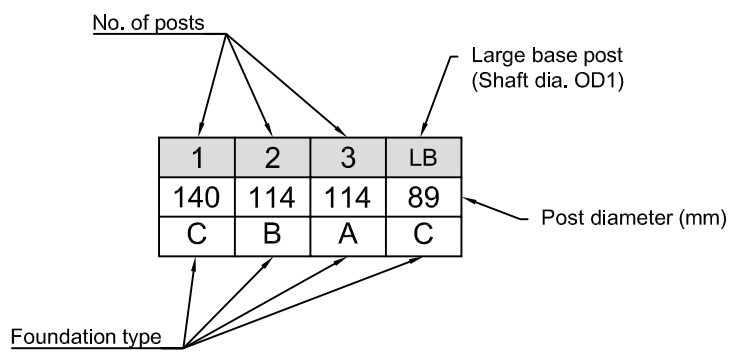

NOTES

1. All dimensions are given in millimetres unless stated otherwise.

2. This chart is suitable for determining post and foundation type in all areas maximum design wind pressure 1.3kPa, safety factor against overturning is 1.23 to BS EN 12899-1:2007 and DMRB volume 2 section 2 part 1 BD 94/07.

3. Maximum allowable ground pressure 85kPa.

4. This drawing should be read in conjunction with HH/SD/1200/001/B.

5. On multi-post assembles where horizontal spacing between individual foundations is impractical the foundation widths shall be combined to a single width see HH/SD/1200/001/C.

6. For signs beyond the range of this chart post sizes and foundations shall be designed from first principles or appropriate sign design software.

Hounslow Highways
Delivering better streets

HOUNSLOW HIGHWAYS
STANDARD DETAILS

TITLE:
POST FOUNDATION DETAILS
DESIGN TABLE (2 OF 2) OF POST DETAILS AND
FOUNDATION SIZES FOR SIGNS UP TO 3sq.m AREA

REV	DATE	BY	DESCRIPTION	CHK	APP

DRAWING STATUS: INFORMATION

SCALE @ A3:	CHECKED:	APPROVED:
N.T.S	TJM	SC
CAD FILE: HH SD 1200 001 A-G.DWG	DESIGN-DRAWN: AN	DATE: 16/10/2014
DRAWING No: HH/SD/1200/001/E		REV:

File name \\MIS.ESERVEMIS.CO.UK\DAVWWWROOT\CONTRACTS\HOUNSLOW\TP CHANGE AND CALL OFF SCHEMES\SSD\SD APP B\CAD\SD AA 21.01.15\HH SD 1200 001 A-G.DWG, printed on 21 January 2015 16:32:14, by Albert Waldmeyer

Area of Sign (s) m²

Hc. (m)	3.01 - 3.50				3.51 - 4.00				4.01 - 4.50				4.51 - 5.00				5.01 - 5.50				5.51 - 6.00				6.01 - 6.50				6.51 - 7.00				7.01 - 7.50				7.51 - 8.00				8.01 - 8.50				8.51 - 9.00				Hc. (m)
2.51 - 2.75	1	2	3	LB	1	2	3	LB	1	2	3	LB	1	2	3	LB	1	2	3	LB	1	2	3	LB	1	2	3	LB	1	2	3	LB	1	2	3	LB	1	2	3	LB	1	2	3	LB	1	2	3	LB	2.51 - 2.75
	168	140	114	140	168	140	114	140	168	140	114	140	194	140	140	140	194	140	140	-	194	140	140	-	194	140	140	-	194	168	140	-	219	168	140	-	219	168	140	-	219	168	140	-	219	168	140	-	
	F	D	C	F	F	D	D	F	G	E	C	G	G	E	D	G	H	E	D	-	H	F	D	-	H	F	D	-	H	F	E	-	H	F	E	-	H	F	E	-	I	G	F	-	I	G	F	-	
2.26 - 2.50	1	2	3	LB	1	2	3	LB	1	2	3	LB	1	2	3	LB	1	2	3	LB	1	2	3	LB	1	2	3	LB	1	2	3	LB	1	2	3	LB	1	2	3	LB	1	2	3	LB	1	2	3	LB	2.26 - 2.50
	140	114	114	140	168	140	114	140	168	140	114	140	168	140	114	140	194	140	140	140	194	140	114	140	194	140	140	-	194	140	140	-	194	168	140	-	194	168	140	-	219	168	140	-	219	168	140	-	
	F	D	C	F	F	D	C	F	F	D	C	F	G	E	D	G	G	E	D	G	H	E	D	H	H	F	D	-	H	F	D	-	H	F	E	-	H	F	E	-	H	F	E	-	I	F	E	-	
2.01 - 2.25	1	2	3	LB	1	2	3	LB	1	2	3	LB	1	2	3	LB	1	2	3	LB	1	2	3	LB	1	2	3	LB	1	2	3	LB	1	2	3	LB	1	2	3	LB	1	2	3	LB	1	2	3	LB	2.01 - 2.25
	140	114	114	114	140	140	114	114	168	140	114	114	168	140	114	140	168	140	114	140	194	140	140	140	194	140	140	140	194	140	140	140	194	140	140	140	194	140	140	-	194	168	140	-	219	168	140	-	
	F	D	C	F	F	D	C	F	F	D	C	F	G	D	D	G	G	E	D	G	G	E	D	G	H	E	D	H	H	F	D	H	H	F	D	H	H	F	E	-	H	F	E	-	H	F	E	-	
1.76 - 2.00	1	2	3	LB	1	2	3	LB	1	2	3	LB	1	2	3	LB	1	2	3	LB	1	2	3	LB	1	2	3	LB	1	2	3	LB	1	2	3	LB	1	2	3	LB	1	2	3	LB	1	2	3	LB	1.76 - 2.00
	140	114	89	114	140	114	114	114	140	140	114	114	168	140	114	114	168	140	114	114	168	140	114	140	168	140	114	140	194	140	140	140	194	140	140	140	194	140	140	140	194	140	140	140	194	140	140	140	
	E	C	C	E	F	D	C	F	F	D	C	F	F	D	C	F	G	D	D	G	G	E	D	G	G	E	D	G	H	E	D	H	H	F	D	H	H	F	D	H	H	F	D	H	H	F	E	H	
1.51 - 1.75	1	2	3	LB	1	2	3	LB	1	2	3	LB	1	2	3	LB	1	2	3	LB	1	2	3	LB	1	2	3	LB	1	2	3	LB	1	2	3	LB	1	2	3	LB	1	2	3	LB	1	2	3	LB	1.51 - 1.75
	140	114	89	114	140	114	89	114	140	114	114	114	140	114	114	114	168	140	114	114	168	140	114	140	168	140	114	140	168	140	114	140	168	140	114	140	194	140	140	140	194	140	140	140	194	140	140	140	
	E	C	C	E	E	C	C	E	F	D	C	F	F	D	C	F	F	D	C	F	G	D	C	C	G	D	D	G	G	E	D	G	G	E	D	G	H	E	D	H	H	F	D	H	H	F	D	H	
1.26 - 1.50	1	2	3	LB	1	2	3	LB	1	2	3	LB	1	2	3	LB	1	2	3	LB	1	2	3	LB	1	2	3	LB	1	2	3	LB	1	2	3	LB	1	2	3	LB	1	2	3	LB	1	2	3	LB	1.26 - 1.50
	140	114	89	89	140	114	89	89	140	114	89	89	140	114	114	114	140	114	114	114	140	140	114	114	168	140	114	114	168	140	114	114	168	140	114	114	168	140	114	114	168	140	114	114	194	140	140	140	
	D	C	C	D	E	C	C	E	E	C	C	E	F	D	C	F	F	D	C	F	F	D	C	F	F	D	D	F	G	D	D	G	G	E	D	G	G	E	D	G	H	E	D	H	H	E	D	H	
1.01 - 1.25	1	2	3	LB	1	2	3	LB	1	2	3	LB	1	2	3	LB	1	2	3	LB	1	2	3	LB	1	2	3	LB	1	2	3	LB	1	2	3	LB	1	2	3	LB	1	2	3	LB	1	2	3	LB	1.01 - 1.25
	114	89	76	76	114	114	76	76	114	114	89	76	140	114	89	76	140	114	89	76	140	114	114	76	140	114	114	76	140	140	114	89	140	140	114	89	168	140	114	89	168	140	114	89	168	140	114	89	
	D	C	B	D	D	C	B	D	E	C	B	E	F	C	C	F	F	D	C	F	F	D	C	F	F	D	C	F	G	D	C	G	G	D	C	G	G	D	C	G	H	E	D	H	H	E	D	H	
	3.01 - 3.50				3.51 - 4.00				4.01 - 4.50				4.51 - 5.00				5.01 - 5.50				5.51 - 6.00				6.01 - 6.50				6.51 - 7.00				7.01 - 7.50				7.51 - 8.00				8.01 - 8.50				8.51 - 9.00				

Height to Centroid(Hc) = Mounting Height(Hm) + $\frac{\text{Height of Sign(s) (Hs)}}{2}$

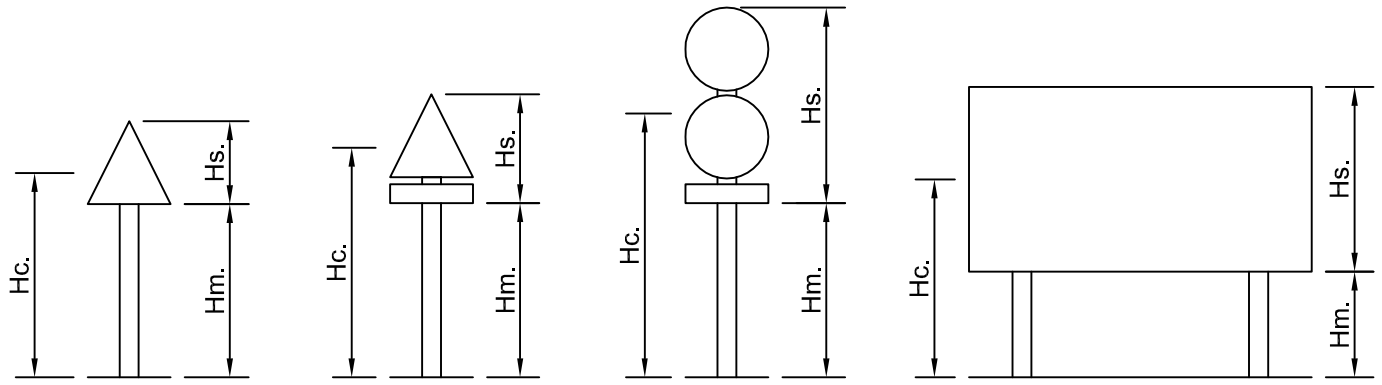

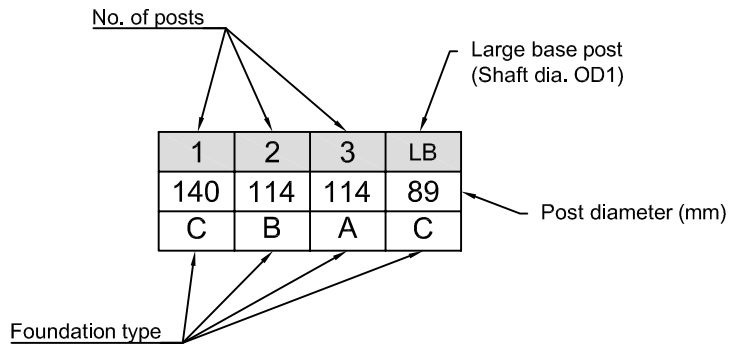

NOTES

1. All dimensions are given in millimetres unless stated otherwise.

2. This chart is suitable for determining post and foundation type in all areas maximum design wind pressure 1.3kPa, safety factor against overturning is 1.23 to BS EN 12899-1:2007 and DMRB volume 2 section 2 part 1 BD 94/07.

3. Maximum allowable ground pressure 85kPa.

4. This drawing should be read in conjunction with HH/SD/1200/001/B.

5. On multi-post assembles where horizontal spacing between individual foundations is impractical the foundation widths shall be combined to a single width see HH/SD/1200/001/C.

6. For signs beyond the range of this chart post sizes and foundations shall be designed from first principles or appropriate sign design software.

Hounslow Highways
Delivering better streets

HOUNSLOW HIGHWAYS
STANDARD DETAILS

TITLE:
POST FOUNDATION DETAILS
DESIGN TABLE (1 OF 2) OF POST DETAIL AND
FOUNDATION SIZES FOR SIGNS UP TO 9sq.m AREA

REV	DATE	BY	DESCRIPTION	CHK	APP

DRAWING STATUS: INFORMATION

SCALE @ A3:	CHECKED:	APPROVED:
N.T.S	TJM	SC
CAD FILE: HH SD 1200 001 A-G.DWG	DESIGN-DRAWN: AN	DATE: 16/10/14
DRAWING No: HH/SD/1200/001/F		REV:

File name \\MIS.ESERVEMIS.CO.UK\DAVWWWROOT\CONTRACTS\HOUNSLOW\TP CHANGE AND CALL OFF SCHEMES\SSD\SD APP B\CAD\SD AA 21.01.15\HH SD 1200 001 A-G.DWG, printed on 21 January 2015 16:33:18, by Albert Waldmeyer

Area of Sign (s) m²

Hc. (m)	3.01 - 3.50				3.51 - 4.00				4.01 - 4.50				4.51 - 5.00				5.01 - 5.50				5.51 - 6.00				6.01 - 6.50				6.51 - 7.00				7.01 - 7.50				7.51 - 8.00				8.01 - 8.50				8.51 - 9.00				Hc. (m)
4.26 - 4.50	1	2	3	LB	1	2	3	LB	1	2	3	LB	1	2	3	LB	1	2	3	LB	1	2	3	LB	1	2	3	LB	1	2	3	LB	1	2	3	LB	1	2	3	LB	1	2	3	LB	1	2	3	LB	4.26 - 4.50
	194	140	140	-	194	140	140	-	219	168	140	-	219	168	140	-	219	168	140	-	244	194	140	-	244	194	168	-	244	194	168	-	244	194	168	-	244	194	168	-	273	194	168	-	273	219	168	-	
	H	F	D	-	H	F	E	-	H	F	E	-	H	F	F	-	I	G	F	-	I	G	F	-	I	G	F	-	I	H	F	-	I	H	F	-	I	H	G	-	I	H	G	-	*	H	G	-	
4.01 - 4.25	1	2	3	LB	1	2	3	LB	1	2	3	LB	1	2	3	LB	1	2	3	LB	1	2	3	LB	1	2	3	LB	1	2	3	LB	1	2	3	LB	1	2	3	LB	1	2	3	LB	1	2	3	LB	4.01 - 4.25
	194	140	140	-	194	140	140	-	194	168	140	-	219	168	140	-	219	168	140	-	219	168	140	-	244	194	168	-	244	194	168	-	244	194	168	-	244	194	168	-	244	194	168	-	273	194	168	-	
	G	E	D	-	H	F	D	-	H	F	E	-	H	F	E	-	H	G	F	-	I	G	F	-	I	G	F	-	I	G	F	-	I	H	F	-	I	H	F	-	I	H	G	-	I	H	G	-	
3.76 - 4.00	1	2	3	LB	1	2	3	LB	1	2	3	LB	1	2	3	LB	1	2	3	LB	1	2	3	LB	1	2	3	LB	1	2	3	LB	1	2	3	LB	1	2	3	LB	1	2	3	LB	1	2	3	LB	3.76 - 4.00
	194	140	140	-	194	140	140	-	194	140	140	-	219	168	140	-	219	168	140	-	219	168	140	-	245	168	140	-	244	194	168	-	244	194	168	-	244	194	168	-	244	194	168	-	244	194	168	-	
	G	E	D	-	H	F	D	-	H	F	E	-	H	F	E	-	H	F	E	-	I	G	F	-	I	G	F	-	I	G	F	-	I	G	F	-	I	H	F	-	I	H	F	-	I	H	G	-	
3.51 - 3.75	1	2	3	LB	1	2	3	LB	1	2	3	LB	1	2	3	LB	1	2	3	LB	1	2	3	LB	1	2	3	LB	1	2	3	LB	1	2	3	LB	1	2	3	LB	1	2	3	LB	1	2	3	LB	3.51 - 3.75
	168	140	114	-	194	140	140	-	194	140	140	-	194	168	140	-	219	168	140	-	219	168	140	-	219	168	140	-	244	168	140	-	244	194	168	-	244	194	168	-	244	194	168	-	244	194	168	-	
	G	E	D	-	G	E	D	-	H	F	D	-	H	F	E	-	H	F	E	-	H	F	E	-	I	G	F	-	I	G	F	-	I	G	F	-	I	G	F	-	I	H	F	-	I	H	F	-	
3.26 - 3.50	1	2	3	LB	1	2	3	LB	1	2	3	LB	1	2	3	LB	1	2	3	LB	1	2	3	LB	1	2	3	LB	1	2	3	LB	1	2	3	LB	1	2	3	LB	1	2	3	LB	1	2	3	LB	3.26 - 3.50
	168	140	114	140	194	140	140	-	194	140	140	-	194	140	140	-	194	168	140	-	219	168	140	-	219	168	140	-	219	168	140	-	244	168	140	-	244	194	168	-	244	194	168	-	244	194	168	-	
	G	E	D	G	G	E	D	-	H	F	D	-	H	F	D	-	H	F	E	-	H	F	E	-	H	F	E	-	I	G	F	-	I	G	F	-	I	G	F	-	I	G	F	-	I	H	F	-	
3.01 - 3.25	1	2	3	LB	1	2	3	LB	1	2	3	LB	1	2	3	LB	1	2	3	LB	1	2	3	LB	1	2	3	LB	1	2	3	LB	1	2	3	LB	1	2	3	LB	1	2	3	LB	1	2	3	LB	3.01 - 3.25
	168	140	114	140	168	140	114	140	194	140	140	-	194	140	140	-	194	140	140	-	194	168	140	-	219	168	140	-	219	168	140	-	219	168	140	-	244	168	140	-	244	194	168	-	244	194	168	-	
	F	D	D	F	G	E	D	G	G	E	D	-	H	F	D	-	H	F	D	-	H	F	E	-	H	F	E	-	H	F	E	-	I	G	F	-	I	G	F	-	I	G	F	-	I	G	F	-	
2.76 - 3.00	1	2	3	LB	1	2	3	LB	1	2	3	LB	1	2	3	LB	1	2	3	LB	1	2	3	LB	1	2	3	LB	1	2	3	LB	1	2	3	LB	1	2	3	LB	1	2	3	LB	1	2	3	LB	2.76 - 3.00
	168	140	114	140	168	140	114	140	194	140	140	140	194	140	140	-	194	140	140	-	194	140	140	-	194	168	140	-	219	168	140	-	219	168	140	-	219	168	140	-	219	168	140	-	244	194	140	-	
	F	D	D	F	G	D	D	G	G	E	D	G	H	E	D	-	H	F	D	-	H	F	D	-	H	F	E	-	H	F	E	-	I	G	F	-	I	G	F	-	I	G	F	-	I	G	F	-	
	3.01 - 3.50				3.51 - 4.00				4.01 - 4.50				4.51 - 5.00				5.01 - 5.50				5.51 - 6.00				6.01 - 6.50				6.51 - 7.00				7.01 - 7.50				7.51 - 8.00				8.01 - 8.50				8.51 - 9.00				

Height to Centroid(Hc) = Mounting Height(Hm) + $\frac{\text{Height of Sign(s) (Hs)}}{2}$

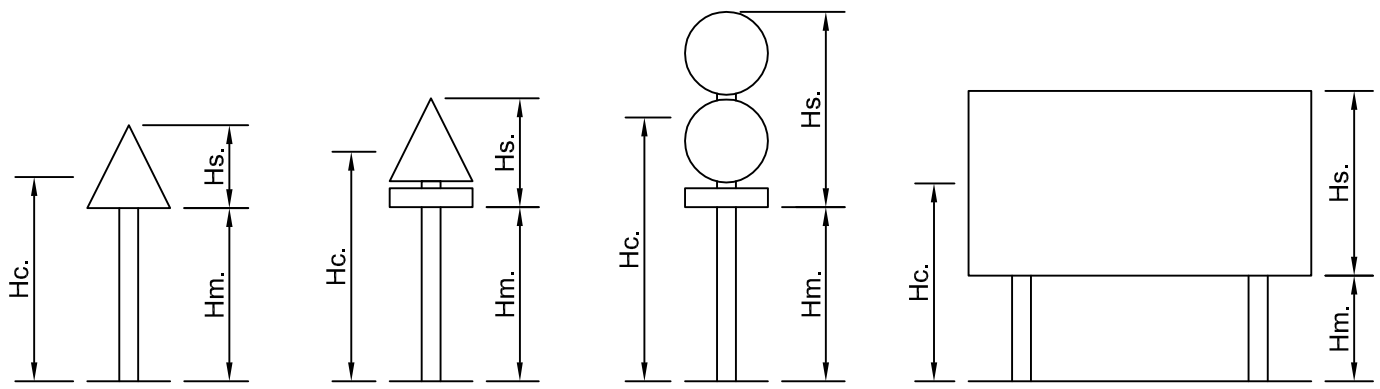

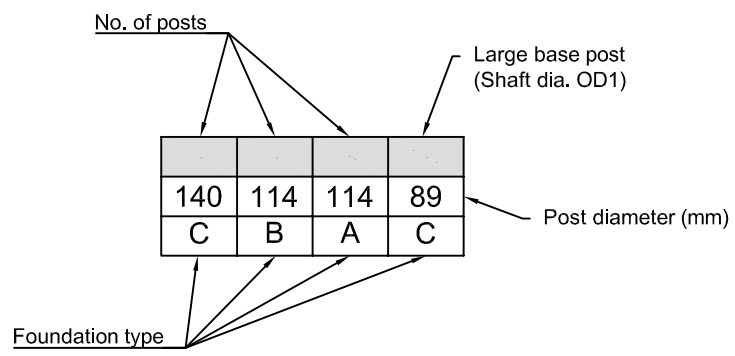

NOTES

1. All dimensions are given in millimetres unless stated otherwise.

2. This chart is suitable for determining post and foundation type in all areas maximum design wind pressure 1.3kPa, safety factor against overturning is 1.23 to BS EN 12899-1:2007 and DMRB volume 2 section 2 part 1 BD 94/07.

3. Maximum allowable ground pressure 85kPa.

4. This drawing should be read in conjunction with HH/SD/1200/001/B.

5. On multi-post assembles where horizontal spacing between individual foundations is impractical the foundation widths shall be combined to a single width see HH/SD/1200/001/C.

6. For signs beyond the range of this chart post sizes and foundations shall be designed from first principles or appropriate sign design software.

Hounslow Highways
Delivering better streets

HOUNSLOW HIGHWAYS
STANDARD DETAILS

TITLE:
POST FOUNDATION DETAILS
DESIGN TABLE (2 OF 2) OF POST DETAILS AND
FOUNDATION SIZES FOR SIGNS UP TO 9sq.m AREA

REV	DATE	BY	DESCRIPTION	CHK	APP

DRAWING STATUS: INFORMATION

SCALE @ A3:	CHECKED:	APPROVED:
N.T.S	TJM	SC
CAD FILE: HH SD 1200 001 A-G.DWG	DESIGN-DRAWN: AN	DATE: 16/10/2014
DRAWING No: HH/SD/1200/001/G		REV:

File name \\MIS.ESERVEMIS.CO.UK\DAVWWWROOT\CONTRACTS\HOUNSLOW\TP CHANGE AND CALL OFF SCHEMES\SSD\SD APP B\CAD\SD AA 21.01.15\HH SD 1200 001 A-G.DWG, printed on 21 January 2015 16:33:49, by Albert Waldmeyer

Scheme Ref.			
Sign Reference	Hounslow SNP	'x'-height	
Letter colour	BLACK	SIGN FACE	
Background	WHITE	Width	1200mm
Border	BLACK	Height	250mm
Material	Class R3B	Area	0.30sq.m

NOTES

1. All dimensions are given in millimetres.

2. Font to be Frutiger Com 45 Light (bold).

3. Ward name always 20mm high, 21mm in from the right side.

4. Road name height must always be one of the values shown, depending on how wide. Leave around 40mm either side of text if possible.

Hounslow Highways
Delivering better streets

HOUNSLOW HIGHWAYS
STANDARD DETAILS

TITLE:
STREET NAME PLATE

REV	DATE	BY	DESCRIPTION	CHK	APP
B	16/10/2014	AN	AMENDED COMMENTS HOUNSLOW HIGHWAYS	TJM	SC
A	06/10/2014	AN	AMEND COMMENTS FROM HOUNSLOW HIGHWAYS	TJM	SC

DRAWING STATUS: INFORMATION

SCALE @ A3: N.T.S
CHECKED: GN
APPROVED:
CAD FILE: HH SD 1200 002.DWG
DESIGN-DRAWN: HS
DATE:
DRAWING No: HH/SD/1200/002
REV: B

File name \\MIS.ESERVEMIS.CO.UK\DAVWWWROOT\CONTRACTS\HOUNSLOW\TP CHANGE AND CALL OFF SCHEMES\SSD\GISD APP B\CAD\SD AA 21.01.15\HH SD 1200 002.DWG, printed on 21 January 2015 16:34:40, by Albert Waldmeyer

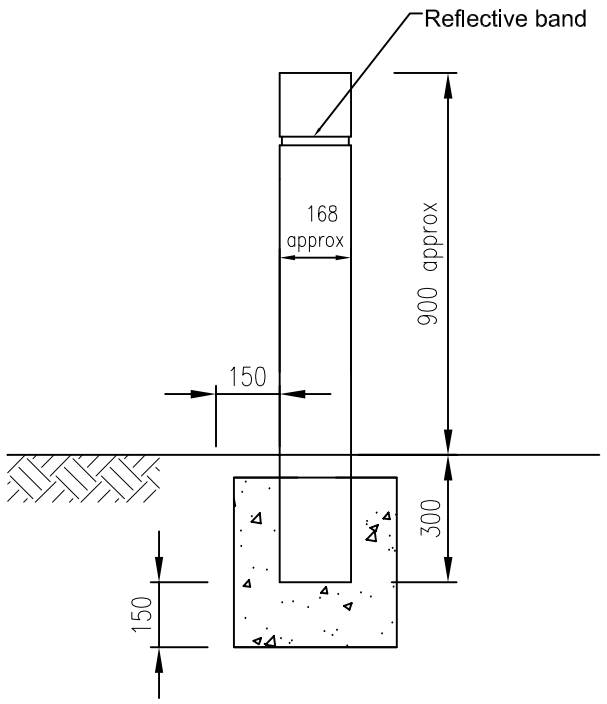

COLD STREAM

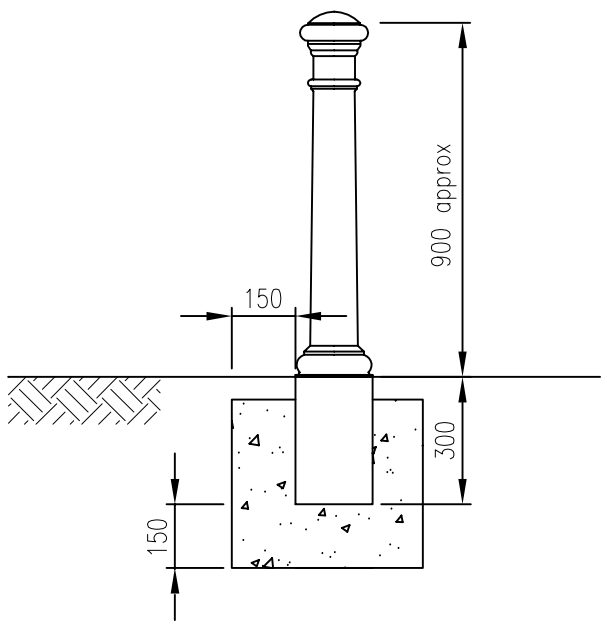

MANCHESTER

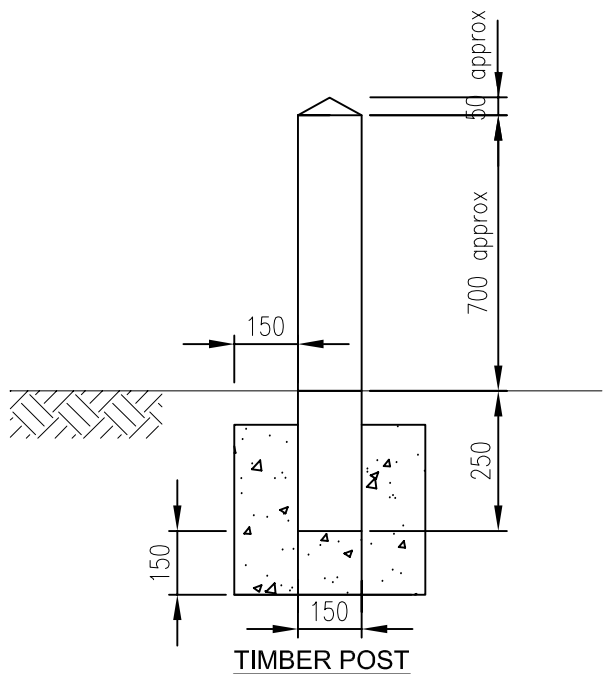

TIMBER POST

NOTES

1. All dimensions are given in millimetres.

2. Dimensions are approximate and can vary slightly depending on manufacturer.

3. Concrete for foundations to be ST1 grade.

Hounslow Highways
Delivering better streets

HOUNSLOW HIGHWAYS
STANDARD DETAILS

TITLE:

BOLLARDS: MANCHESTER, COLD STREAM AND WOODEN

REV	DATE	BY	DESCRIPTION	CHK	APP
A	16/10/14	AN	AMENDED COMMENTS HOUNSLOW HIGHWAYS	TJM	SC

DRAWING STATUS: INFORMATION

SCALE @ A3:	CHECKED:	APPROVED:
N.T.S	TJM	SC
CAD FILE: HH SD 1200 003.DWG	DESIGN-DRAWN: AN	DATE: 01/10/2014

DRAWING No: HH/SD/1200/003

REV: A

File name \\MIS.ESERVEMIS.CO.UK\DAVWWWROOT\CONTRACTS\HOUNSLOW\TP CHANGE AND CALL OFF SCHEMES\SSD\SD APP B\CAD\SD AA 21.01.15\HH SD 1200 003.DWG, printed on 21 January 2015 16:38:09, by Albert Waldmeyer

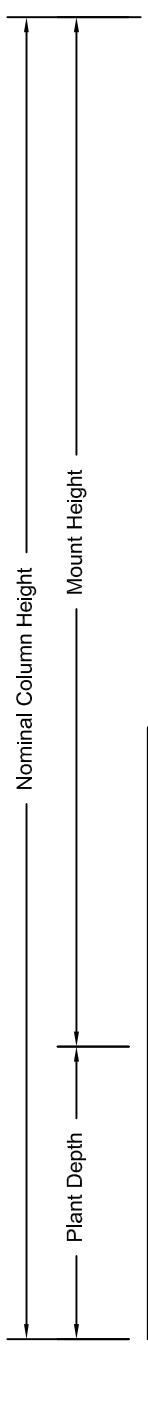

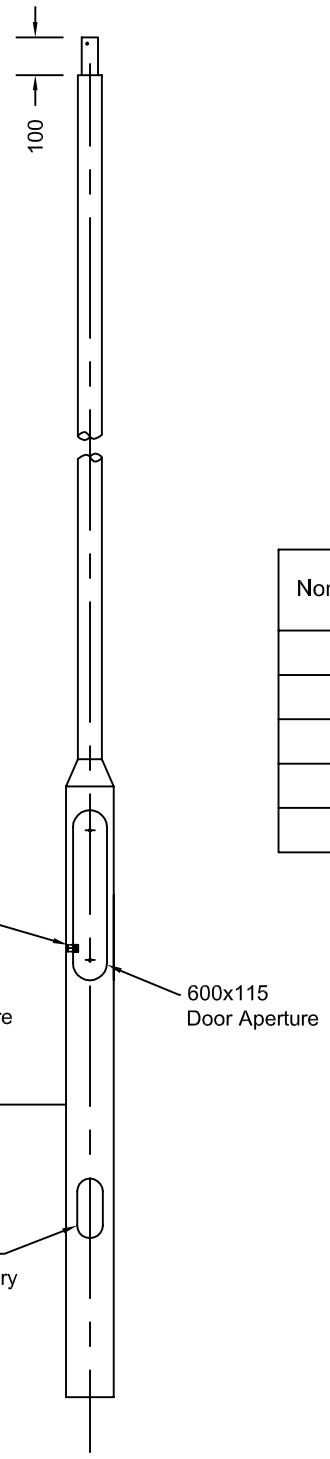

Column Mount Height
5m
6m

Column Mount Height
7m
10m
12m

Nominal Column Height	Column Mount Height	Planting Depth (m)
5800	5000	800
7000	6000	1000
9200	8000	1200
11500	10000	1500
13700	12000	1700

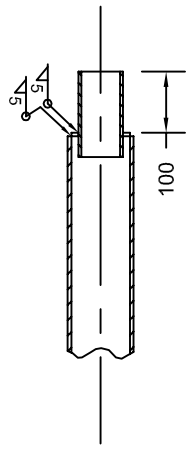

Spigot Joint

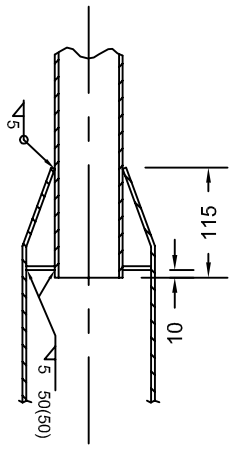

Structural Joint

Foundation Details	
Column Mount Height	Depth of Concrete Surround
5000	300
6000	300
8000	450
10000	450
12000	600

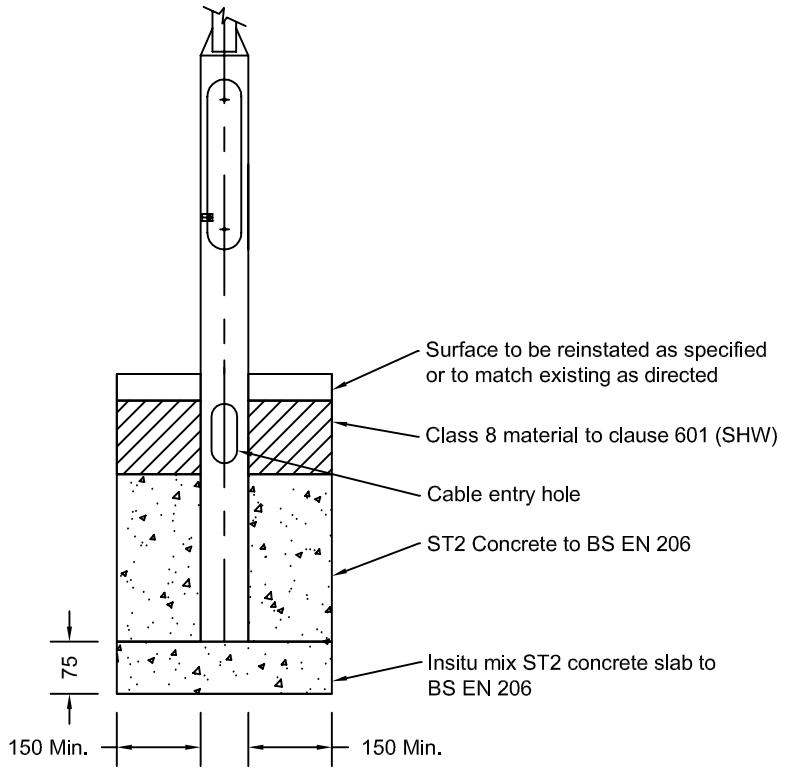

Foundation Detail

NOTES

1. All dimensions are given in millimetres.

2. Details relating to the diameters of the columns should be obtained from the manufacturer.

Hounslow Highways
Delivering better streets

HOUNSLOW HIGHWAYS
STANDARD DETAILS

TITLE:
LAMP COLUMN TYPES AND FOUNDATION DETAIL

REV	DATE	BY	DESCRIPTION	CHK	APP

DRAWING STATUS: INFORMATION

SCALE @ A3:	CHECKED:	APPROVED:
N.T.S	TJM	SC
CAD FILE: HH SD 1300 001.DWG	DESIGN-DRAWN: AN	DATE: 09.10.14
DRAWING No: HH/SD/1300/001		REV:

File name \\MIS.ESERVEMIS.CO.UK\DAVWWWROOT\CONTRACTS\HOUNSLOW\TP CHANGE AND CALL OFF SCHEMES\SSD\GISD APP B\CAD\SD AA 21.01.15\HH SD 1300 001.DWG, printed on 22 January 2015 11:52:01, by Albert Waldmeyer

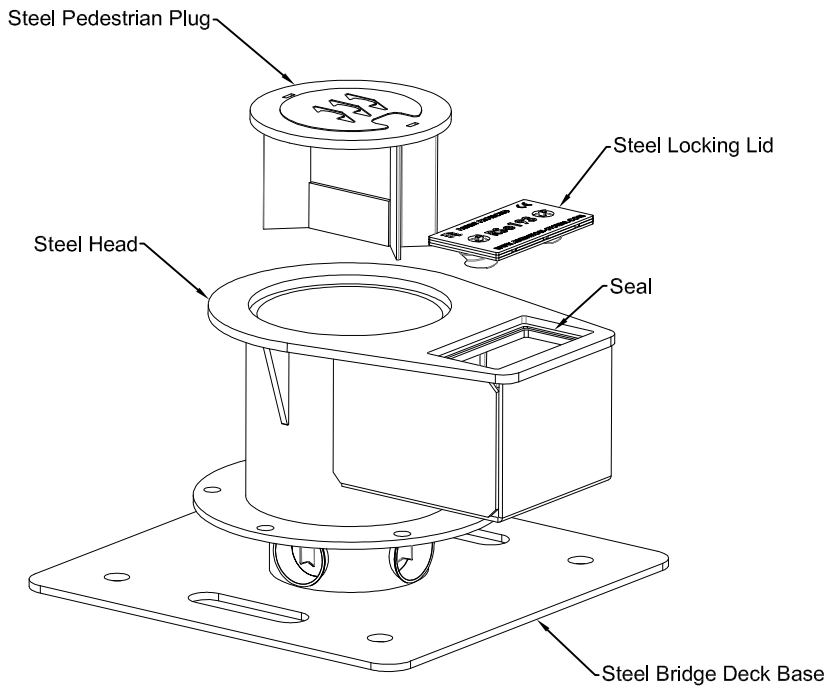

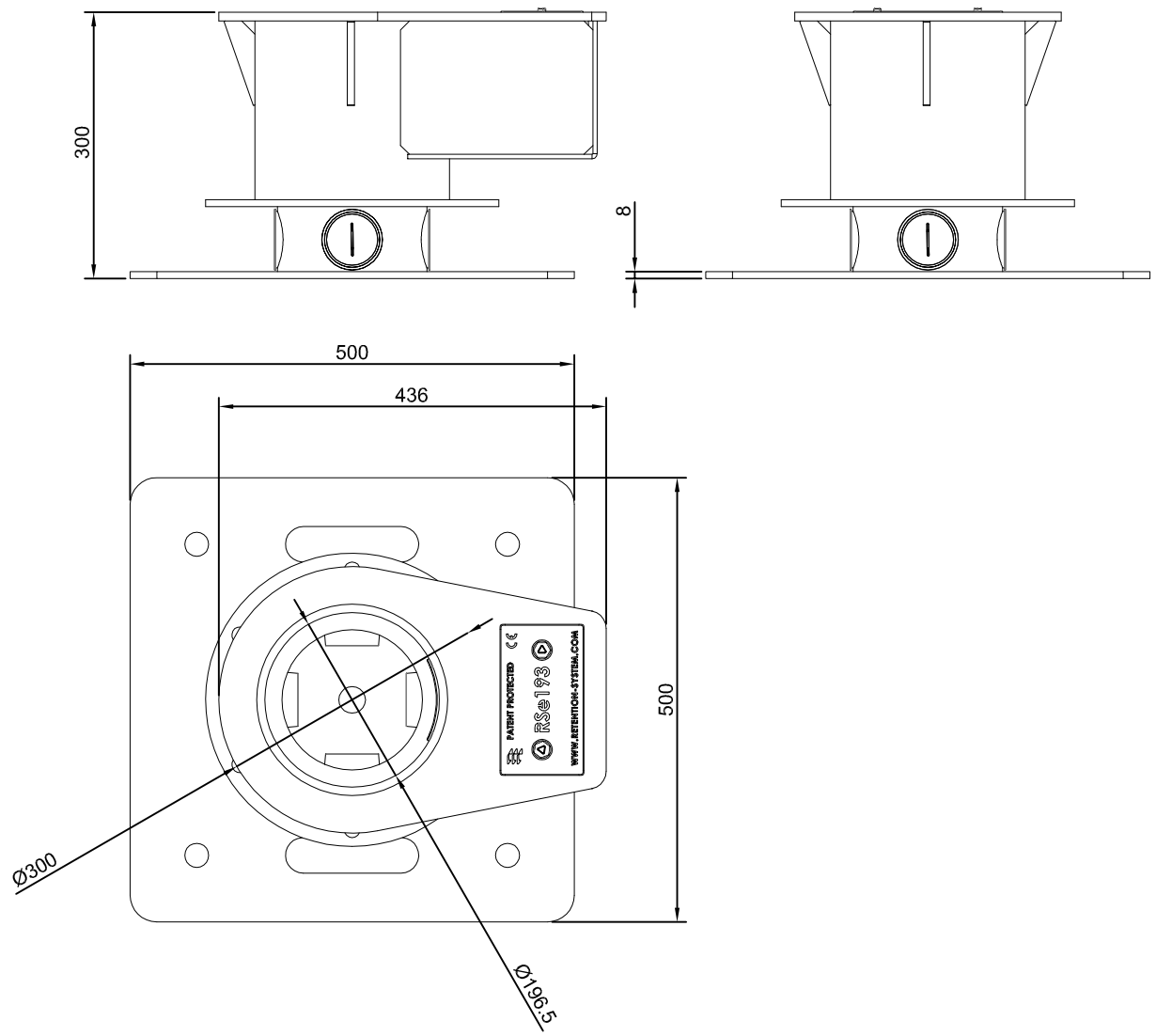

Foundation Detail

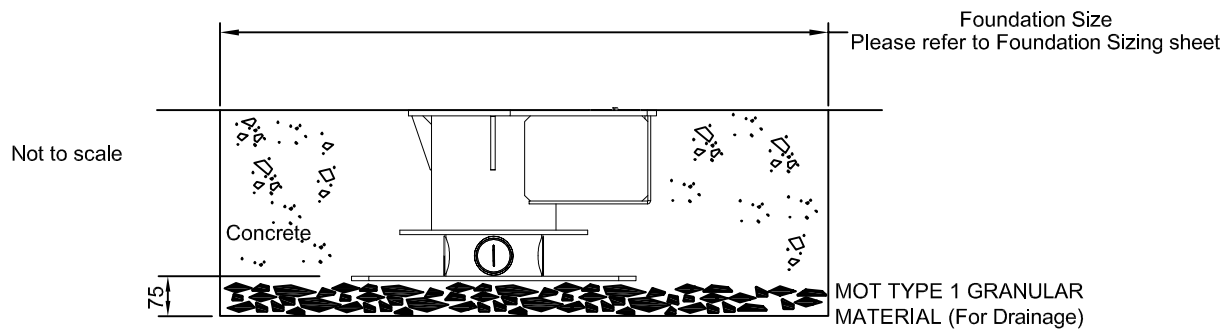

Please refer to Foundation Sizing sheet

NOTES

Product specification for Retention Socket for shallow foundation

Retention Sockets tops must be constructed from cast steel to GS240 or ductile iron to BS2789 500-7

Retention Sockets must be capable of withstanding high speed vehicle impact forces to steel posts with a wall thickness of 6mm. Retention Sockets must be able to withstand impact without any structural surround to the top 80mm of the unit.

All sockets must be impact tested by an independent certified test centre and must be impact tested with a min 6mm steel post at 50kph. Test data and independent certification must be available to substantiate claims for sockets and foundations.

Posts must be positively secured into the Retention Sockets and be able to withstand a turning moment of 3.4kNm through a load of 230kg @ 1.5metre from the centre of post without any rotation.

Securing mechanism of sockets to post must not damage the coating or galvanised surface of the post.

All fixings which secure posts in place must be housed below ground ensuring no risk of damage, vandalism or theft.

Retention Socket Pedestrian plugs must be tested to EN124 - B125 (12.5 tonne) loading.

Retention Sockets must be supplied with appropriately designed reinforcing structure. It must have the ability to accept 4nr 50mm ducts and cables must be via the base of the column.

Retention sockets must be supplied in a maximum depth of 300mm.

All operating components must be serviceable on site without excavating the socket.

The Retention Socket must be capable of being installed in areas of graded surfaces such as those at pedestrian crossing while the installed pole is vertical.

Suppliers of Retention Sockets must be able to supply EN40 & BD94/07 foundation design calculations for all sizes and depths of retention sockets supplied.

All Retention Sockets must be provided to the above specification by NAL Ltd, or any equally approved manufacturer.

Hounslow Highways
Delivering better streets

HOUNSLOW HIGHWAYS
STANDARD DETAILS

TITLE:
SHALLOW STREET LIGHTING FOUNDATION TYPE RSe193

REV	DATE	BY	DESCRIPTION	CHK	APP
0	02/11/2017	AW	INITIAL DRAWING	AA	AA

DRAWING STATUS: INFORMATION

SCALE @ A3:	CHECKED:	APPROVED:
NTC	AA	AA
CAD FILE: HH SD 1300 006.DWG	DESIGN-DRAWN: AW	DATE: 02/11/2017
DRAWING No: HH/SD/1300/006		REV: 0

File name Q:\SDG\APP B STANDARD DETAILS\CADINE\HH SD 1300 006.DWG, printed on 02 November 2017 13:10:47, by Albert Waldmeyer

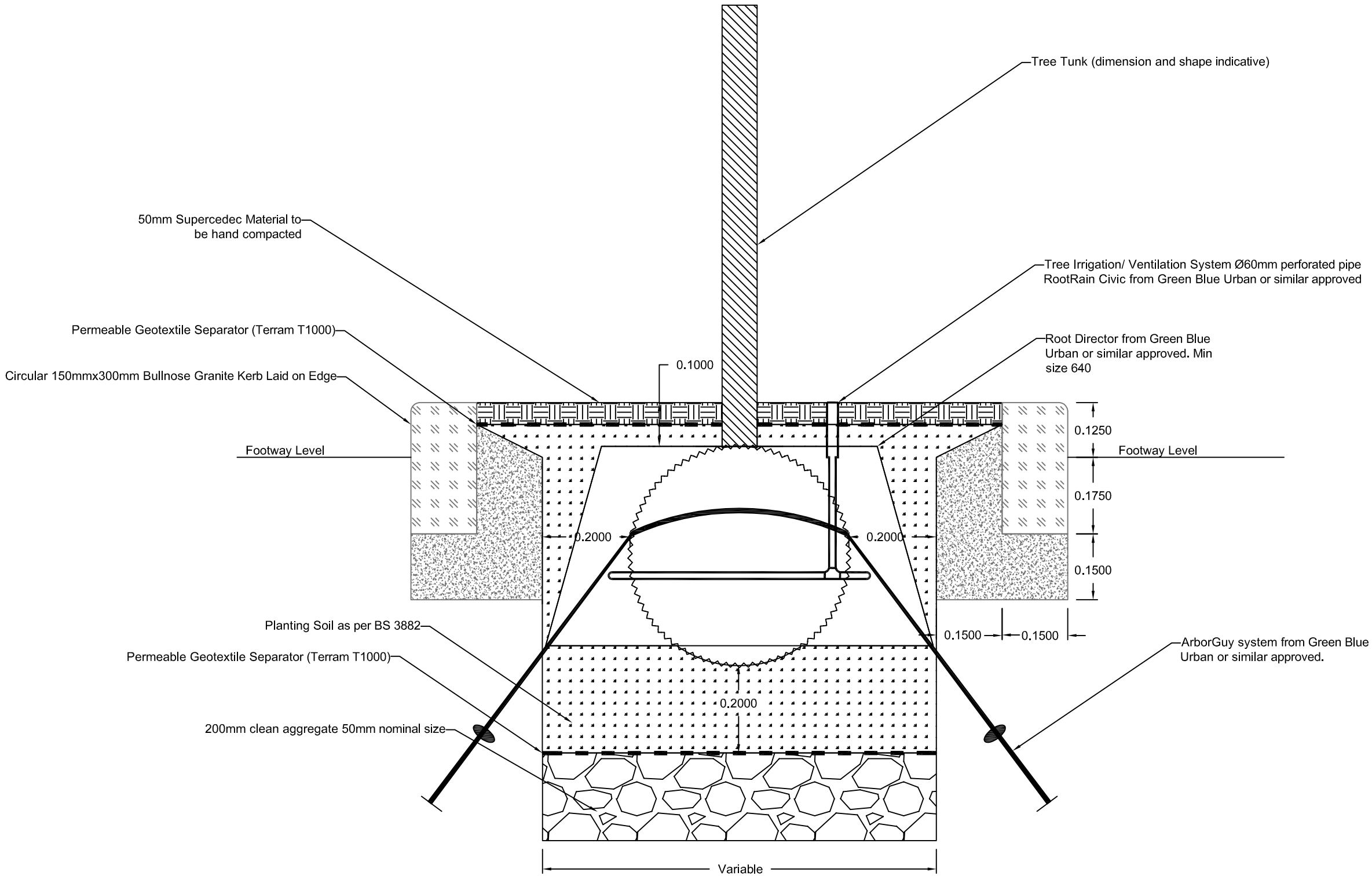

NOTES

1. All Dimensions are to be in meters unless otherwise specified.
2. Tree pit to be backfilled in 300mm layer "Lightly Settled".
3. ArborGuy system required only for tree with girth over 180mm.

File name Q:\SDG\SD APP B\CAD\SD AA 21.01.15\HH SD 3000 001.DWG, printed on 23 September 2016 16:17:45, by Albert Waldmeyer

Hounslow Highways
Delivering better streets

HOUNSLOW HIGHWAYS
STANDARD DETAILS

TITLE:
TREE PIT DETAIL HIGH STREET
TYPE 1

REV	DATE	BY	DESCRIPTION	CHK	APP
0	15/09/2016	AW	INITIAL DRAWING	AA	AA

DRAWING STATUS: INFORMATION

SCALE @ A3:	CHECKED:	APPROVED:
1:10	AA	AA
CAD FILE: HH SD 3000 001.DWG	DESIGN-DRAWN: AW	DATE: 15/09/2016

DRAWING No: HH/SD/3000/001

REV: 0

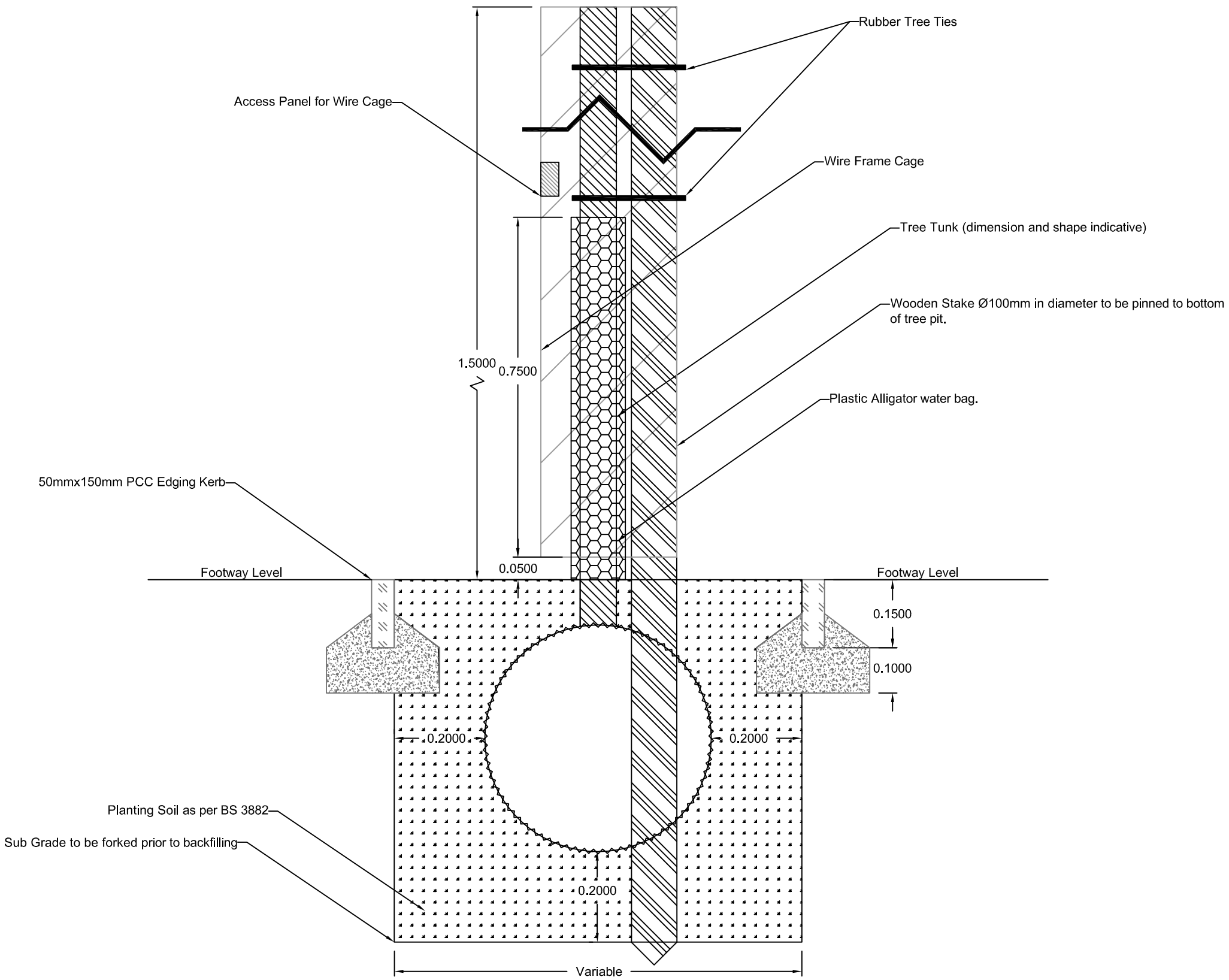

NOTES

1. All Dimensions are to be in meters unless otherwise specified
2. Tree pit to be backfilled in 300mm layer "Lightly Settled"

Hounslow Highways
Delivering better streets

HOUNSLOW HIGHWAYS
STANDARD DETAILS

TITLE:
TREE PIT DETAIL RESIDENTIAL STREET
TYPE 2

REV	DATE	BY	DESCRIPTION	CHK	APP
0	15/09/2016	AW	INITIAL DRAWING	AA	AA

DRAWING STATUS: INFORMATION

SCALE @ A3:	CHECKED:	APPROVED:
1:10	AA	AA
CAD FILE: HH SD 3000 002.DWG	DESIGN-DRAWN: AW	DATE: 15/09/2016

DRAWING No: HH/SD/3000/002
REV: 0

File name Q:\SDG\SD APP B\CAD\SD AA 21.01.15\HH SD 3000 002.DWG, printed on 23 September 2016 16:20:28, by Albert Waldmeyer